TECHNICAL DATASHEET

Elektroschweißen

E-MUFFE

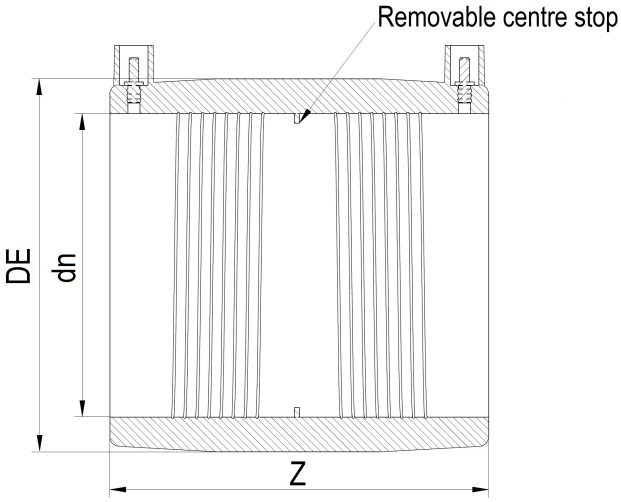

PRODUCT DETAILS	
ITEM CODE	MP280B
d_n	280
SDR DESIGN	17

GEOMETRIC CHARACTERISTICS	
DE [mm]	323
d_n	280
Z [mm]	231
Mass [kg]	3.57

*The pictures are for illustrative purposes only. the product may differ in color and / or some of its parts.

PLASTITALIA SPA reserves the right to revise this specification, while maintaining compliance with the requirements of the product without prior notice. Tolerance on diameters and thickness according to the standards unless otherwise specified. Tolerance: ± 5%

Via Ferrara - 98061 - Brolo (ME) - Italy tel. +39 0941 536311 fax +39 0941 561476 info@plastitaliaspa.com
www.plastitaliaspa.com